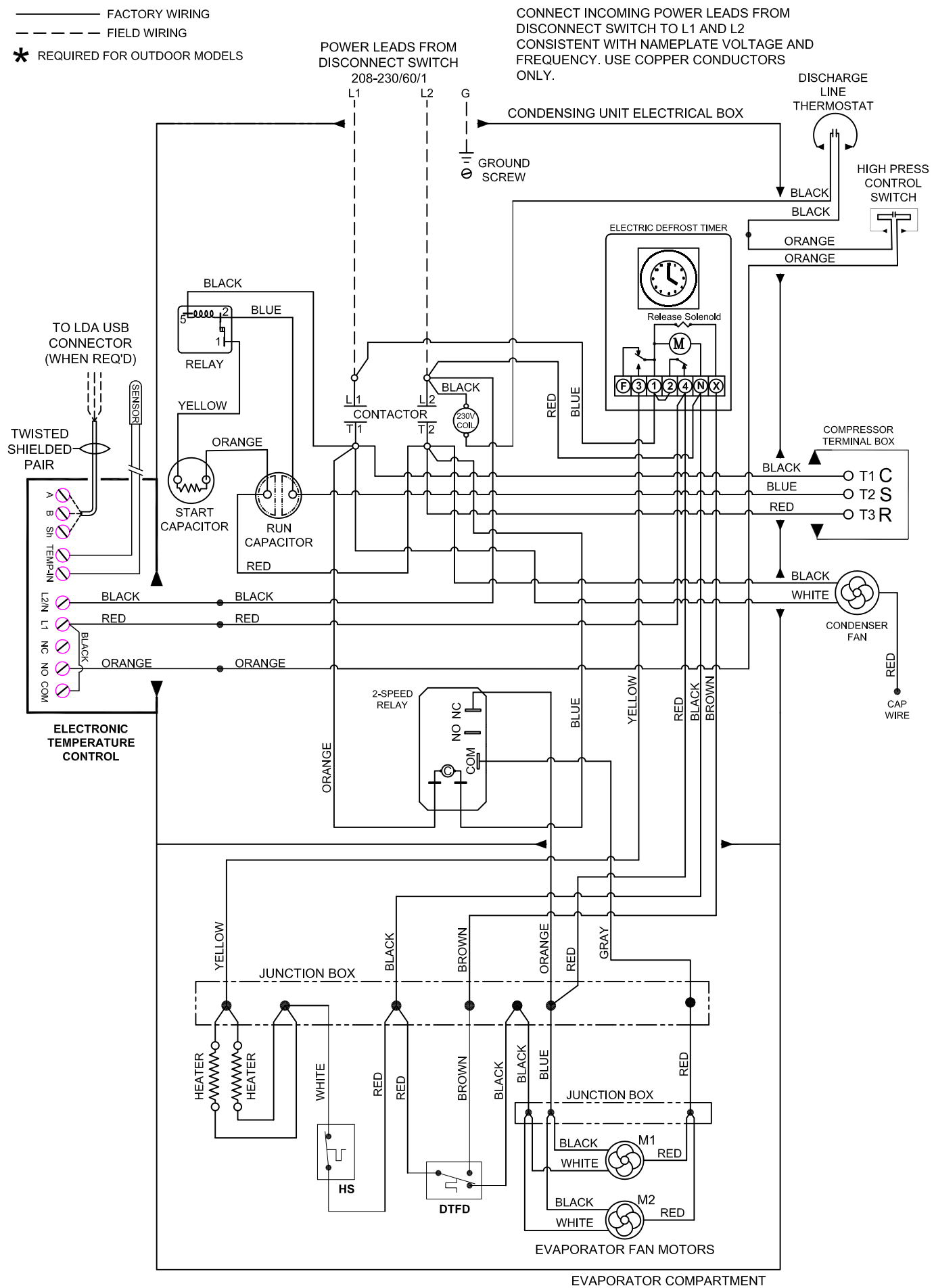

R448A POLAR PAK FREEZER WIRING DIAGRAM 208-230/1/60

NOTE:
SYSTEM IS SUPPLIED WITH A HOT GAS CONDENSATE PAN. A CONDENSATE DRAIN LINE IS NOT REQUIRED.

NOTE:
18" CLEARANCE REQUIRED ON ALL SIDES FOR PROPER OPERATION OF POLAR PAK SYSTEMS.

ITEMS PROVIDED INCLUDE:

1. Liquid Line Filter/Driers
2. Electronic Temp Control (Installed)
3. Expansion Valve (Installed)
4. Scroll Compressor-Copeland
5. High Pressure Switch
6. Fan Motors-115/1/60

CONFORMS TO ANSI/UL STD 427

CERTIFIED TO CAN/CSA STD C22.2 NO.120-04

Intertek 40807

THIS DRAWING/FILE IS THE PROPERTY OF KOLPAK AND IS STORED IN AN ELECTRONIC DATA BASE. ANY ALTERATIONS OR ADDITIONS MUST BE APPROVED BY KOLPAK ENGINEERING AND CHANGED IN DATA BASE.

SIGNED APPROVED PRINT MUST BE REC'D. B/4 FAB.
☐ APPROVED AS DRAWN
☐ APPROVED AS NOTED
☐ REVISE AND RESUBMIT
SIGNED_____
DATE_____

KOLPAK
A Welbilt Brand
2915 Tennessee Avenue North, Parsons, TN 38363
(731) 847-6361*(800) 826-7036*

REFRIGERATING UNIT - FREEZER

MODEL	PF148T3			1.5	HP
VOLTS	208-230	PH	1	CYCLES	60
REFRIGERANT	R448A	34	OZ.	5,790	BTUH
TOTAL LOAD	15.4	AMPS	TOTAL HEAT REJECTED	12,185	BTUH
MIN.CIRCUIT AMPACITY	18.8		EVAP. FAN	0.6	AMPS EA.
MAX.EXTERNAL FUSE SIZE	30		EVAP. FAN	38W	HP
COMP. RLA	13.6		DEFROST	4.3	AMPS
COMP. LRA	68.0		COND. FAN	0.6	AMPS
LOW SIDE DESIGN PRESS.	230	PSIG	COND. FAN	38W	HP
HIGH SIDE DESIGN PRESS.	450	PSIG	WEIGHT	300	LBS.
AWEF	2.07				

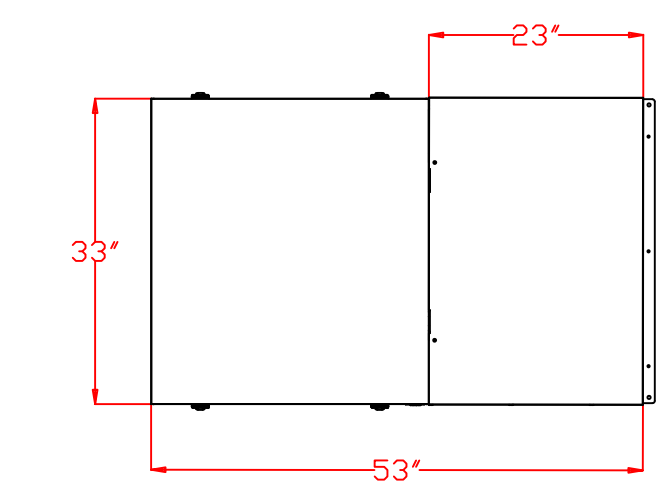

TOP VIEW

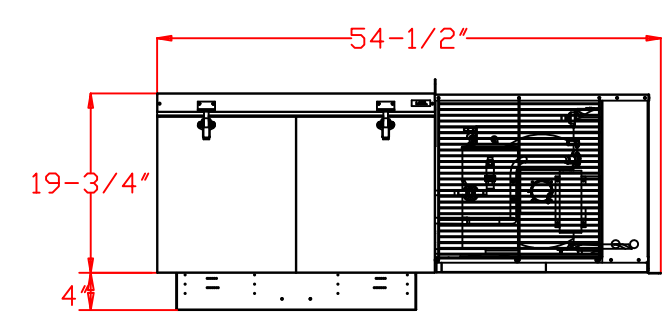

FRONT VIEW

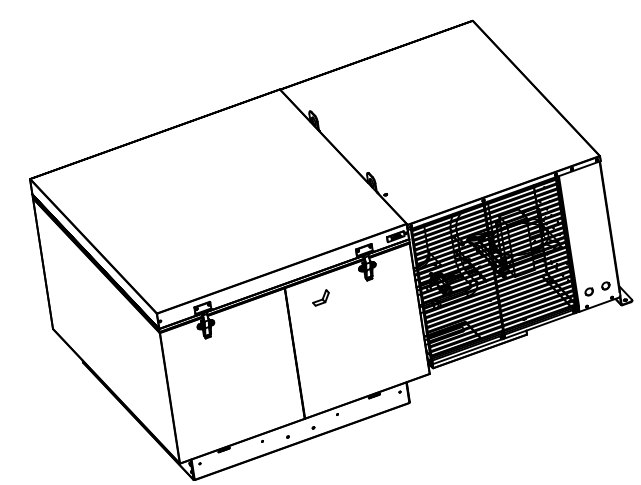

DATE	No.	DESCRIPTION OF CHANGE	AUTH	BY
06.09.20	3	ADDED AWEF		DW

PF148T3 (208-230/1/60)

SCALE: NONE	DEALER:	DRAWN BY: DJW
DATE: 01.14.2020		REVISED
KOLPAK A Welbilt Brand 2915 Tennessee Avenue North, Parsons, TN 38363 (731) 847-6361*(800) 826-7036*		KOLPAK QUOTE NO:
		DRAWING NUMBER: PF148T3